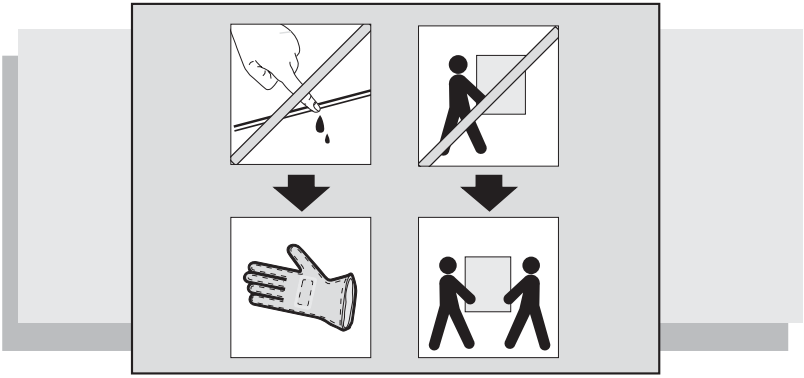

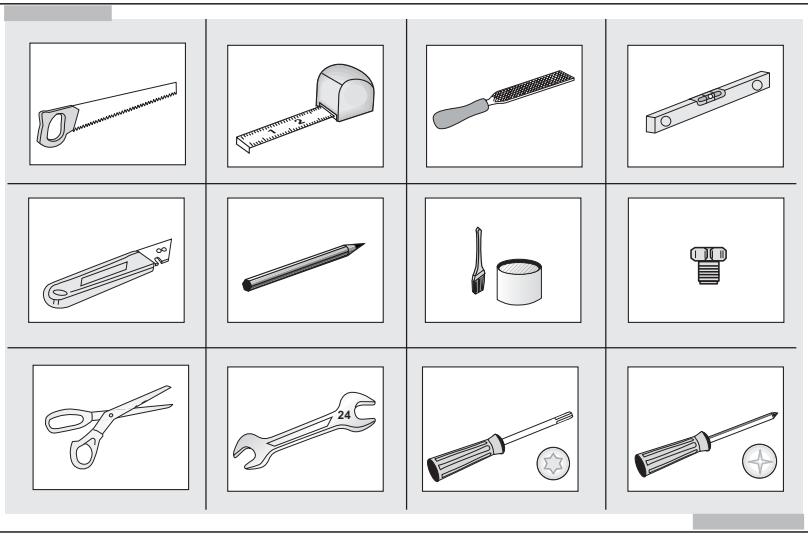
24

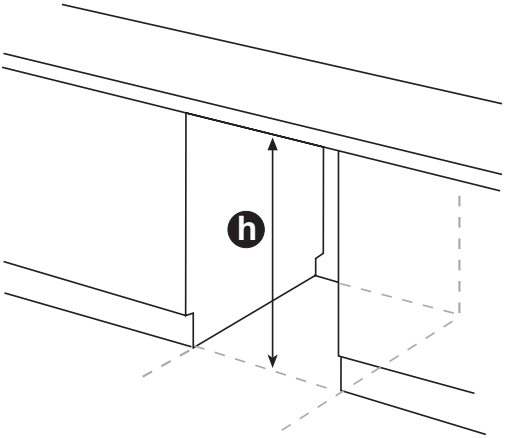
h

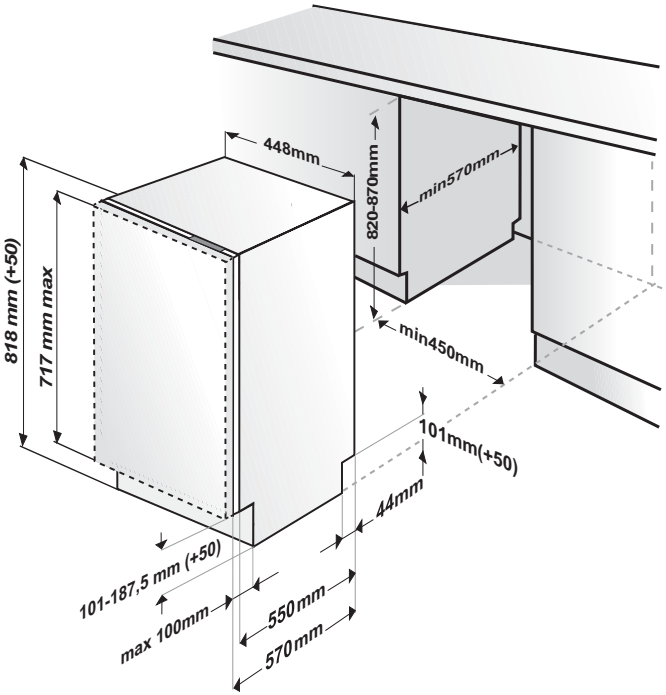


**h = 820mm - 870mm**

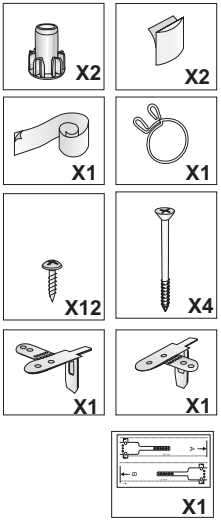


**h = 870mm - 920mm**

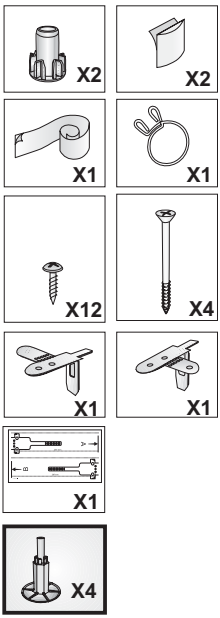


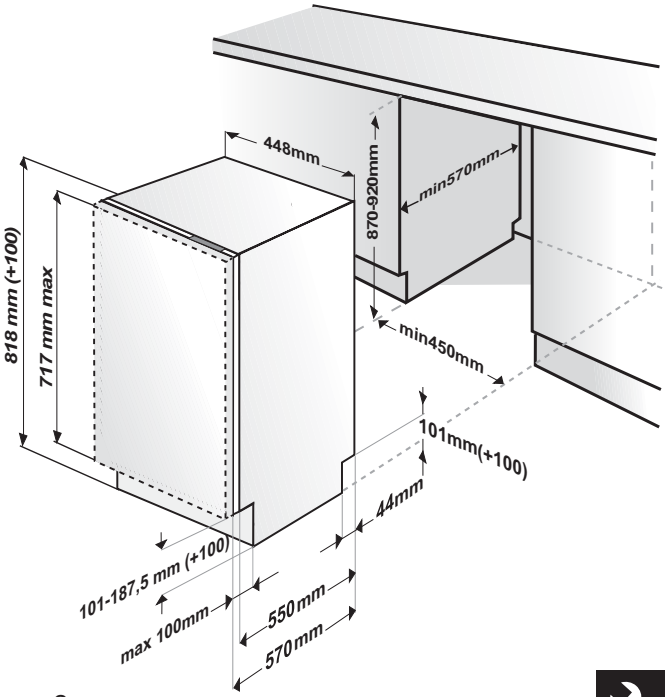

# 1

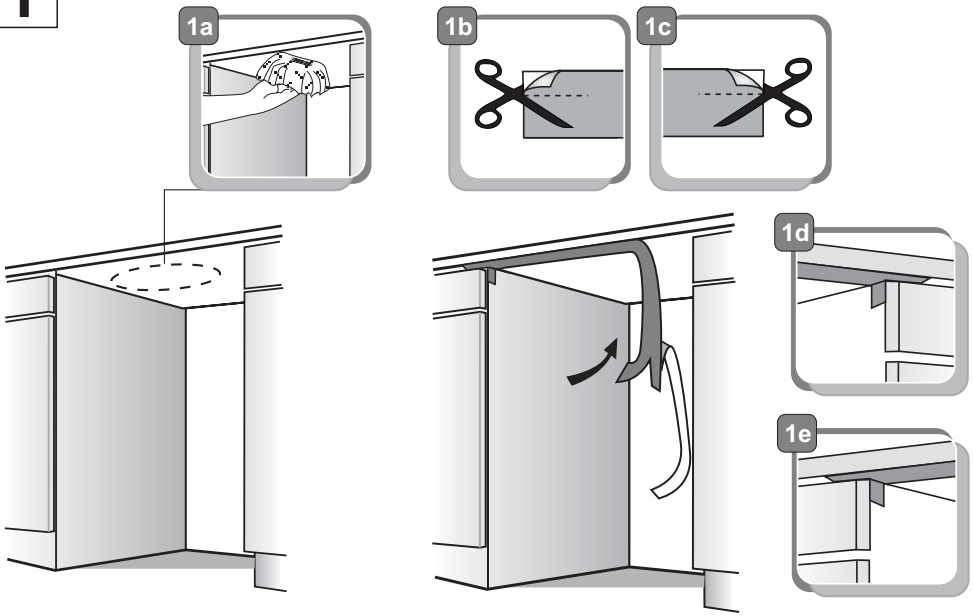


**h = 820mm - 870mm** → 2a  **h = 870mm - 920mm** → 2b

# 2a

**h = 820mm - 870mm**

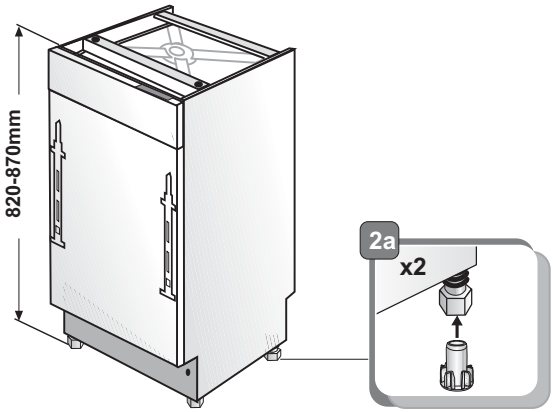

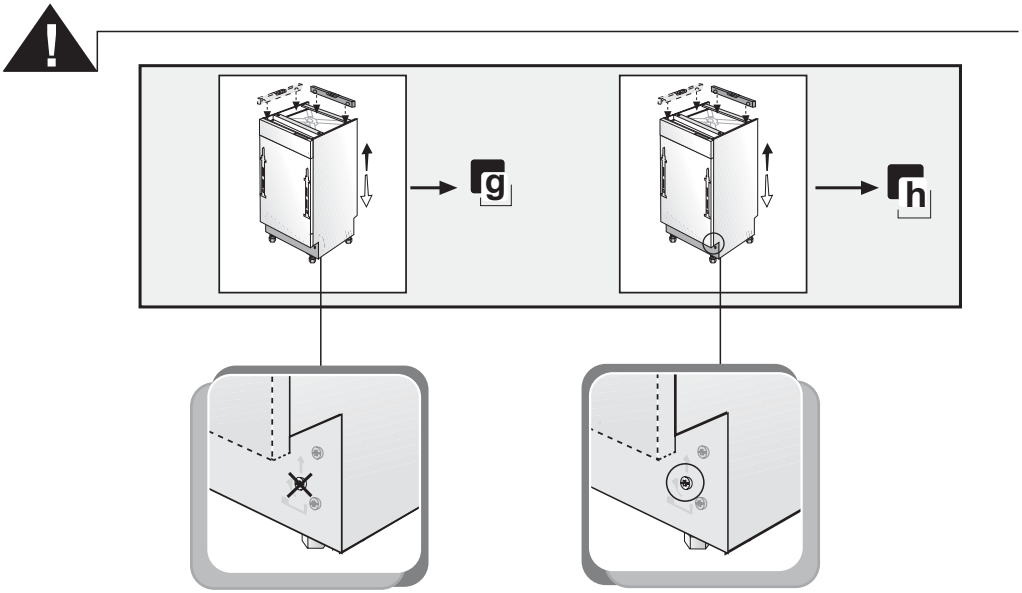
g
h

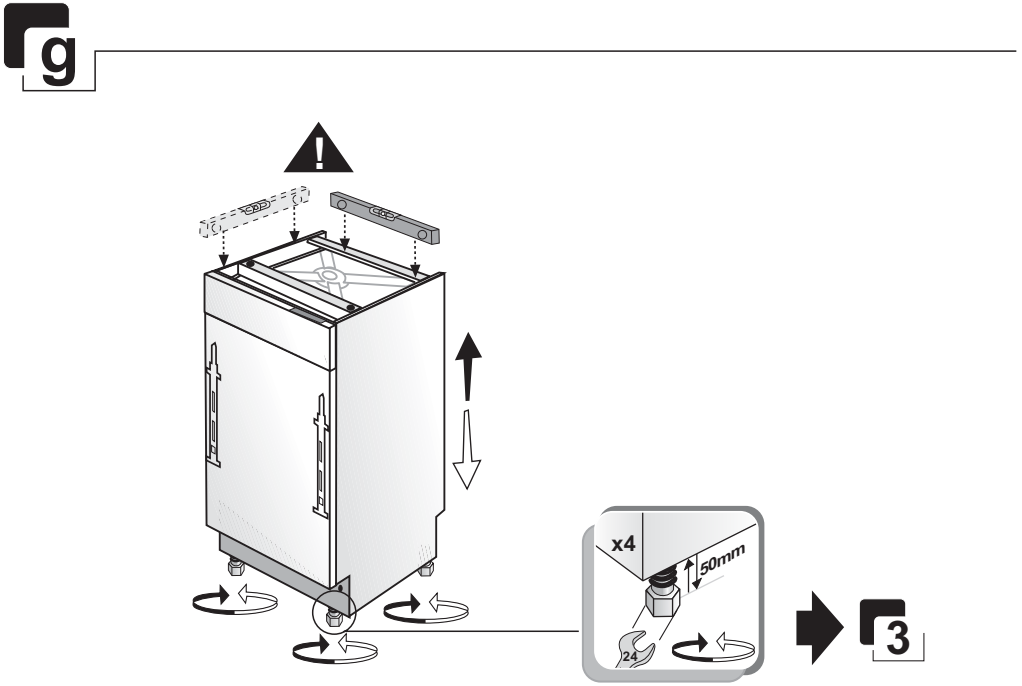
x4
50mm
24
3

## h

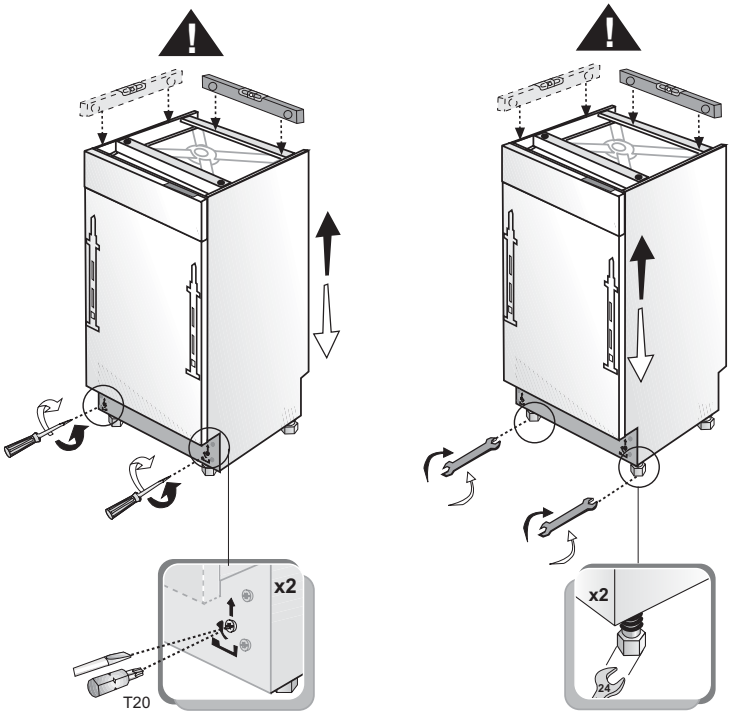


## 2b

**h = 870mm - 920mm**

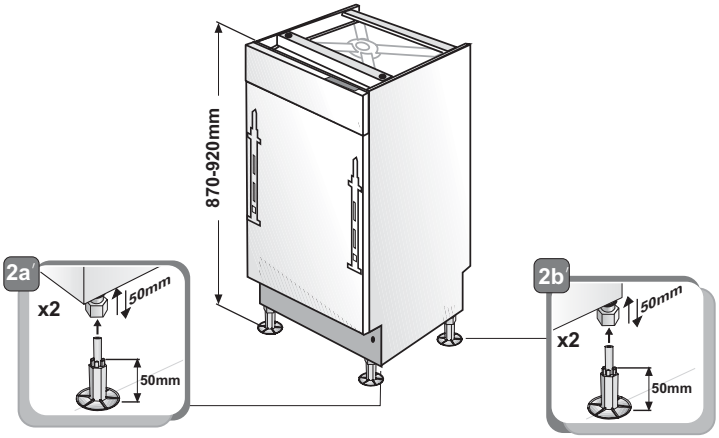

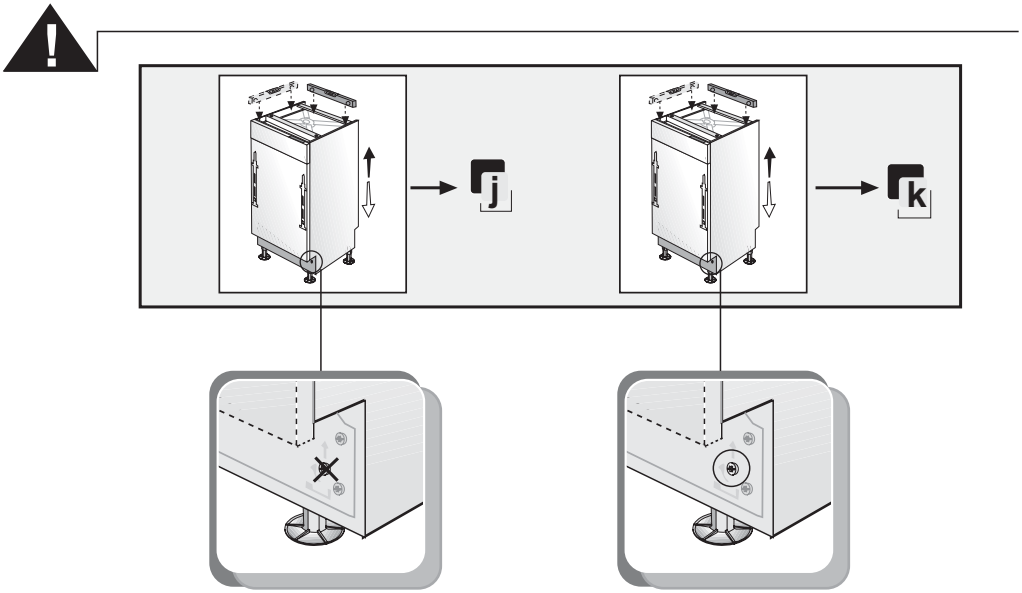
j
k

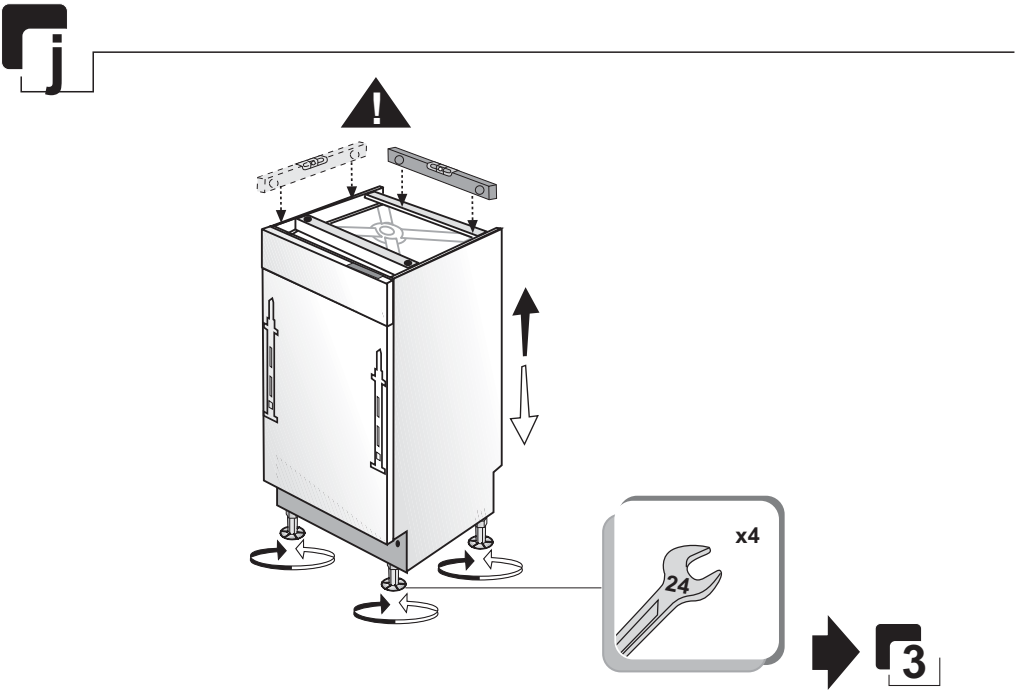
x4
24
3

k

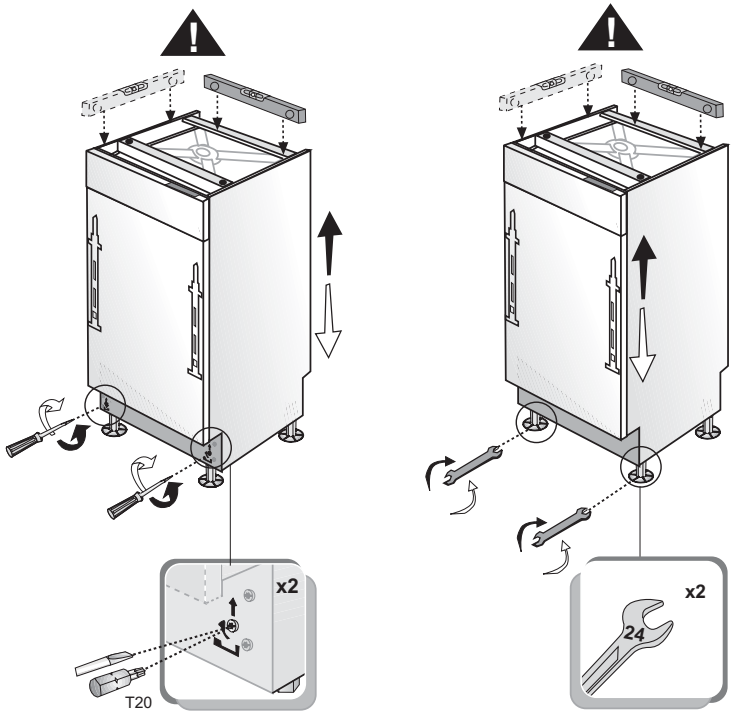


3

3

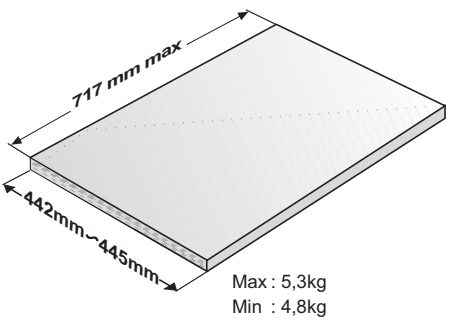


Max : 5,3kg
Min : 4,8kg

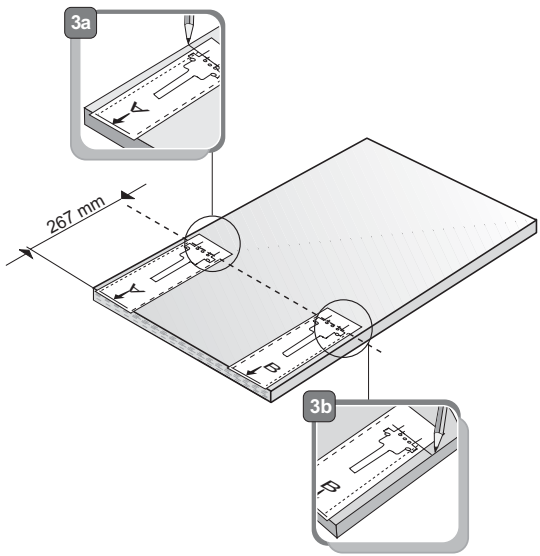

## 4

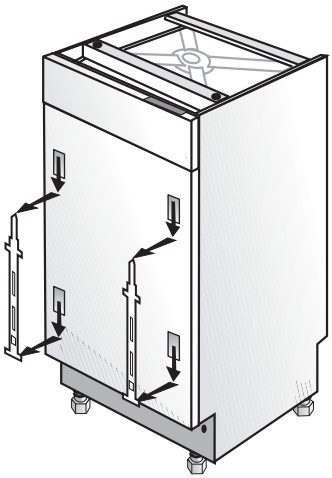

## 5

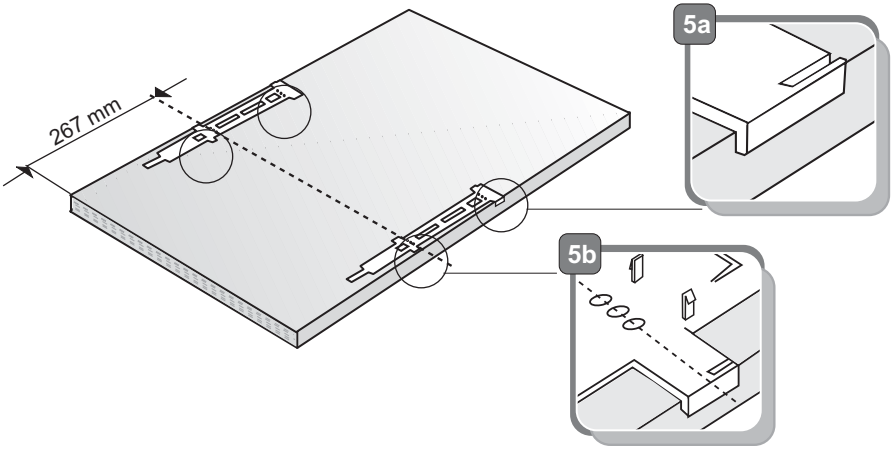

## 6

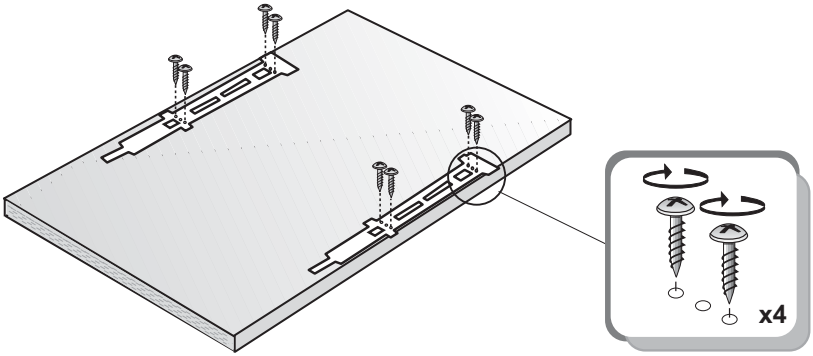


## 7

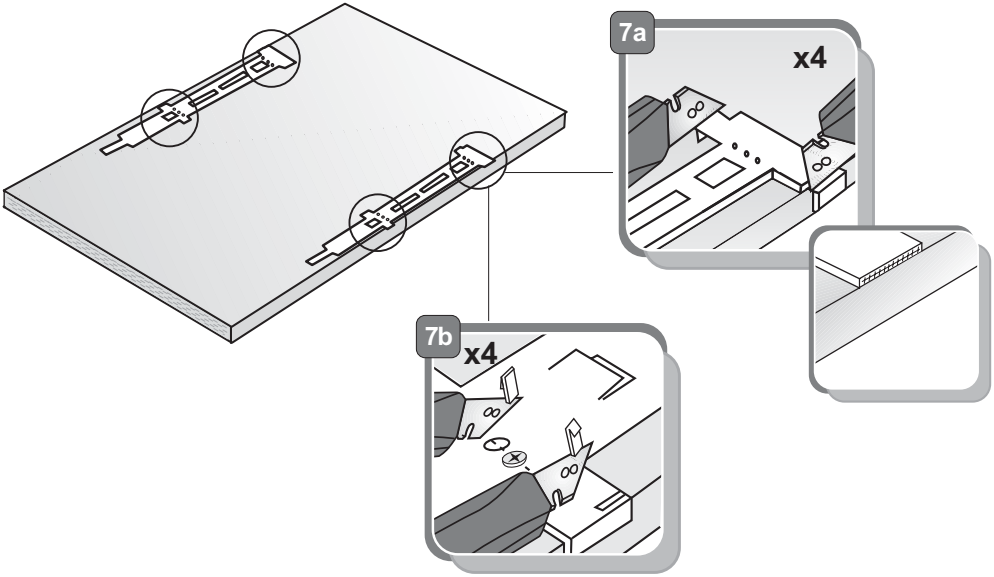

## 8

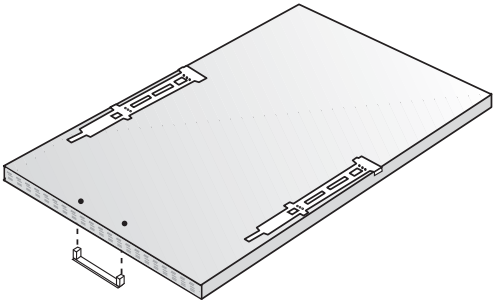

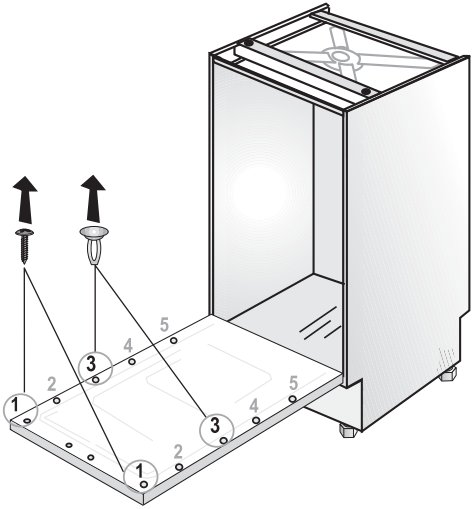


## 9

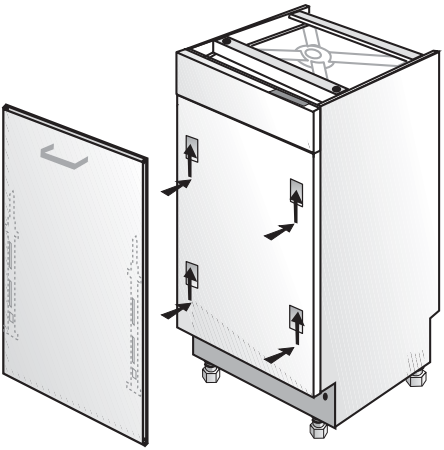

## 10

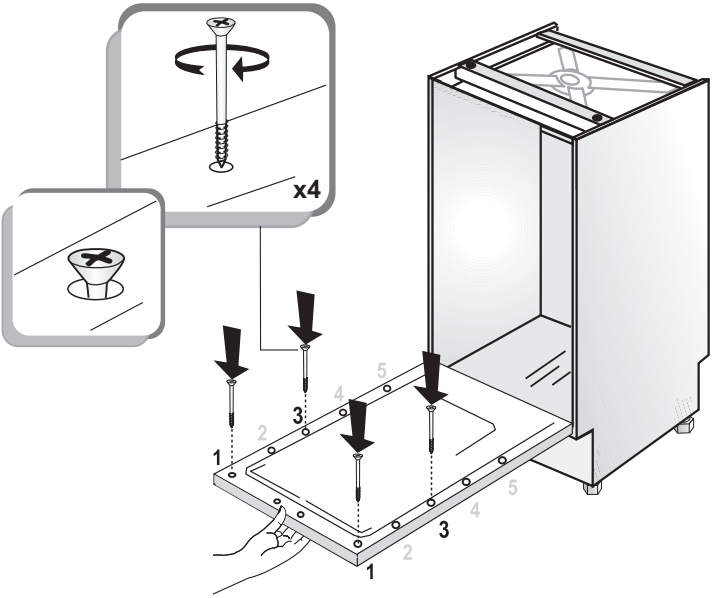


## 11

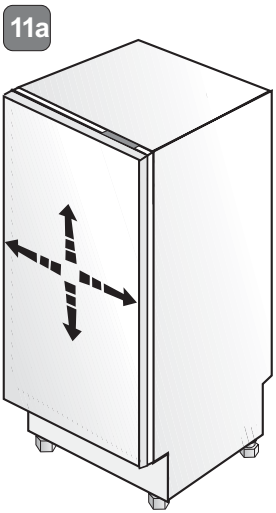


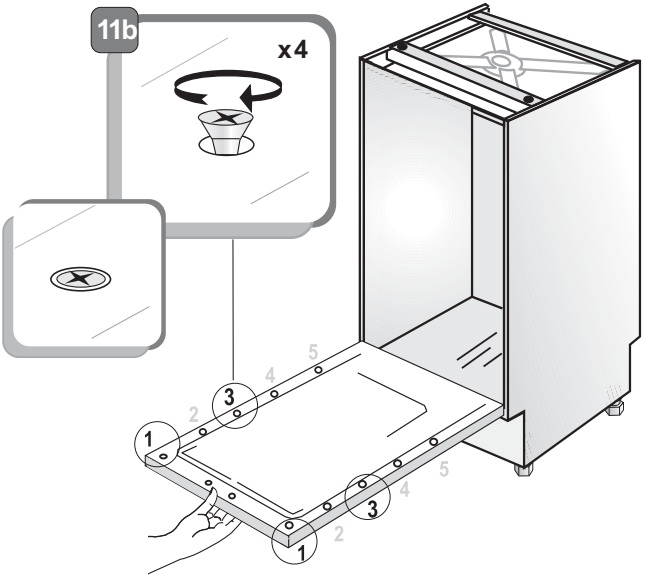

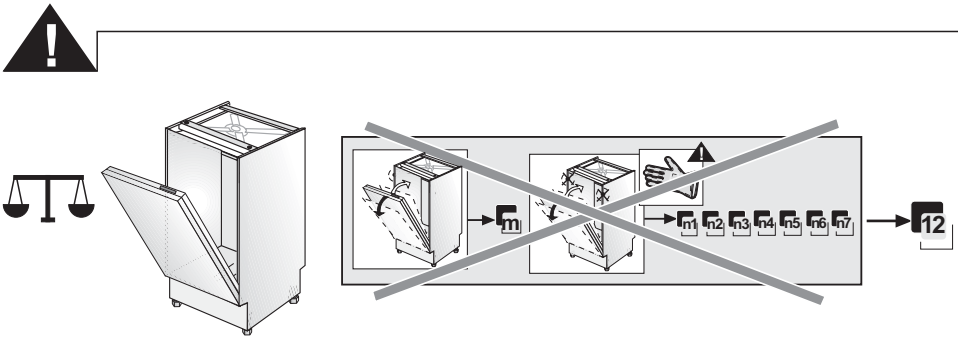
m
n1
n2
n3
n4
n5
n6
n7
12

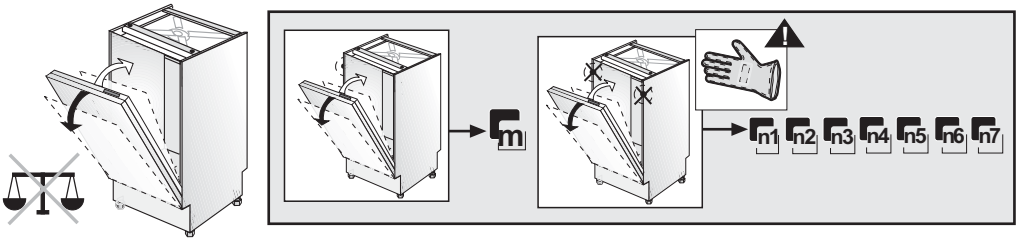
m
n1
n2
n3
n4
n5
n6
n7

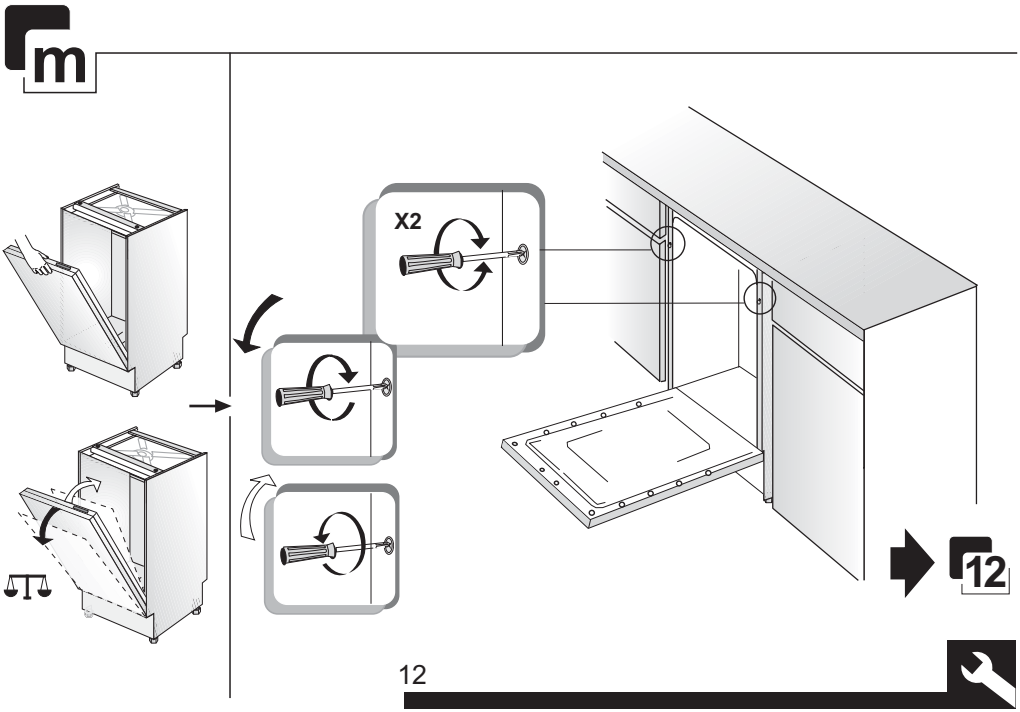
m
X2
12

## n1

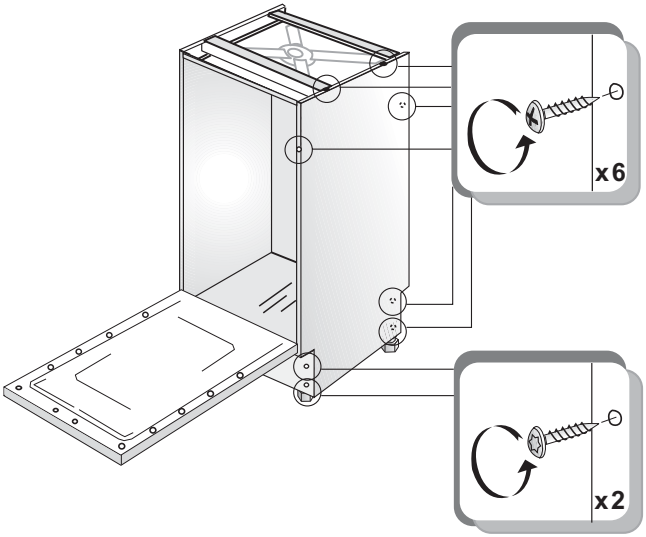


## n2

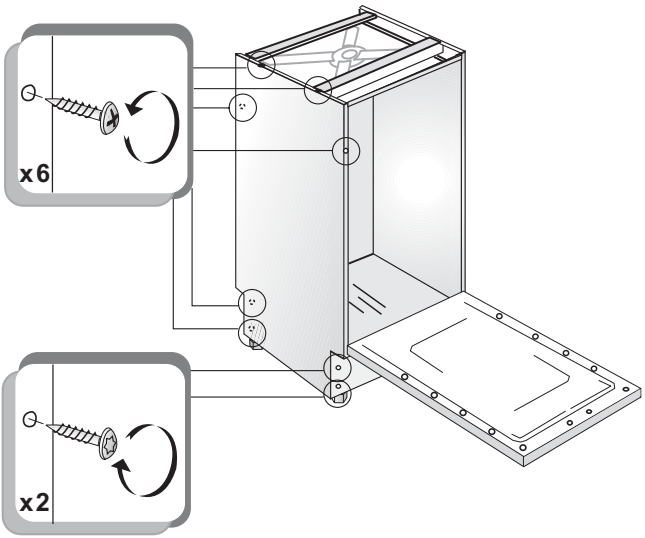

## n3

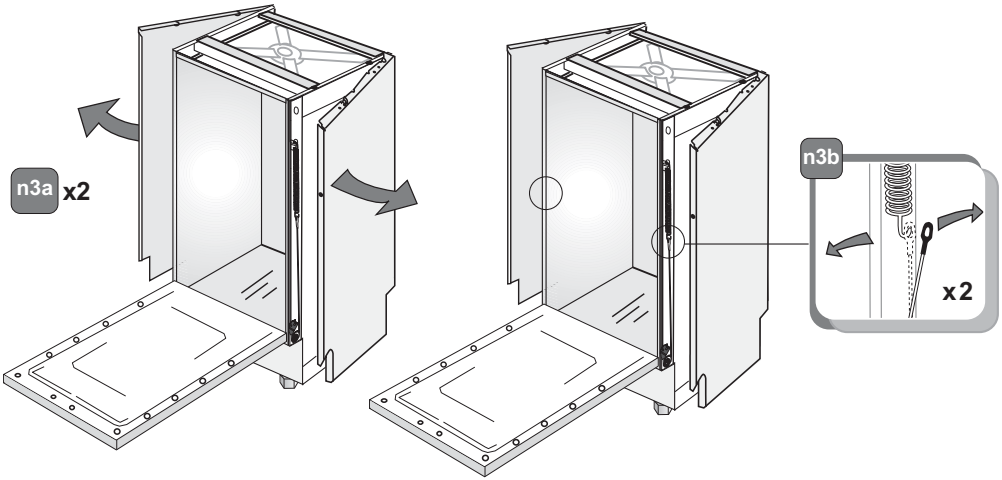


## n4

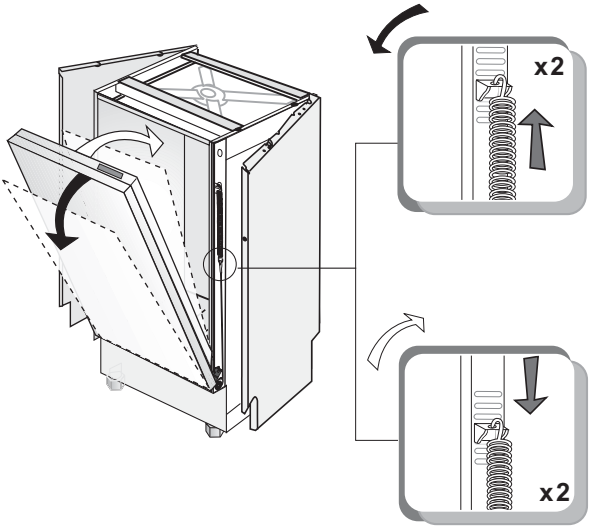

## n5

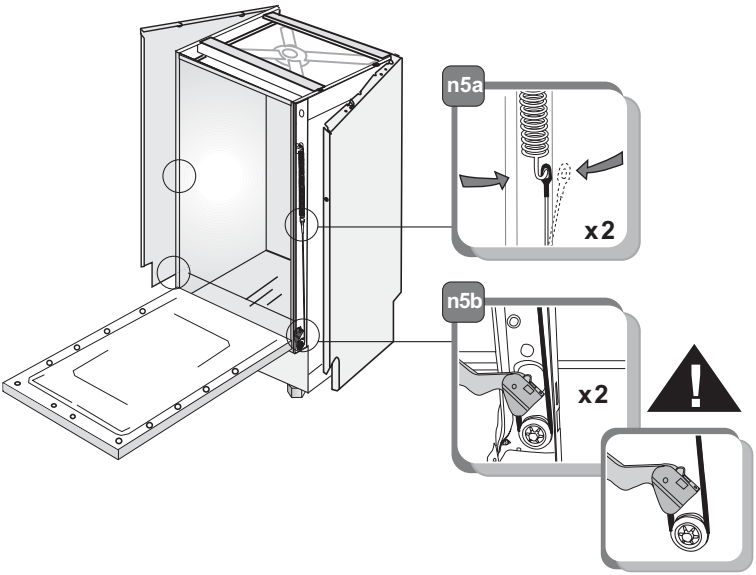


## n6

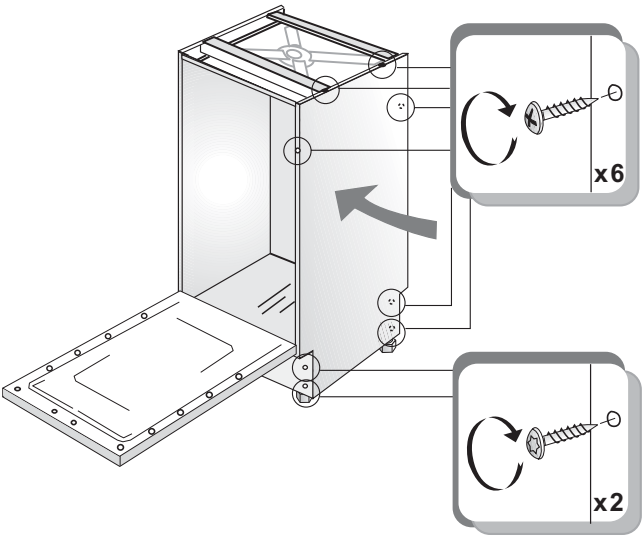

## n7

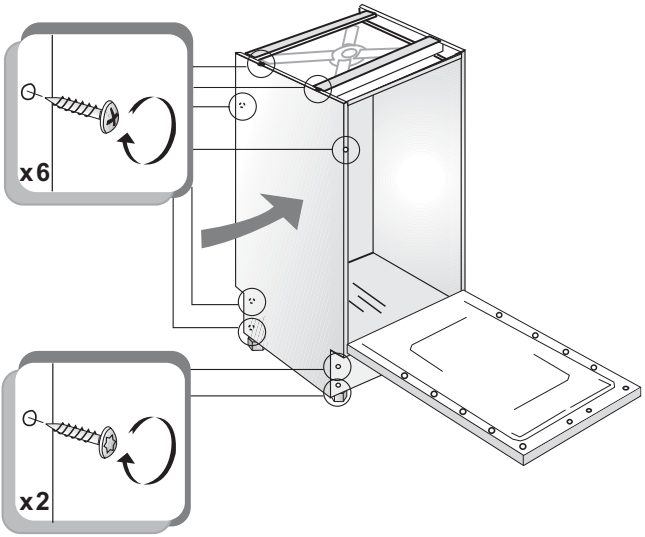


## 12

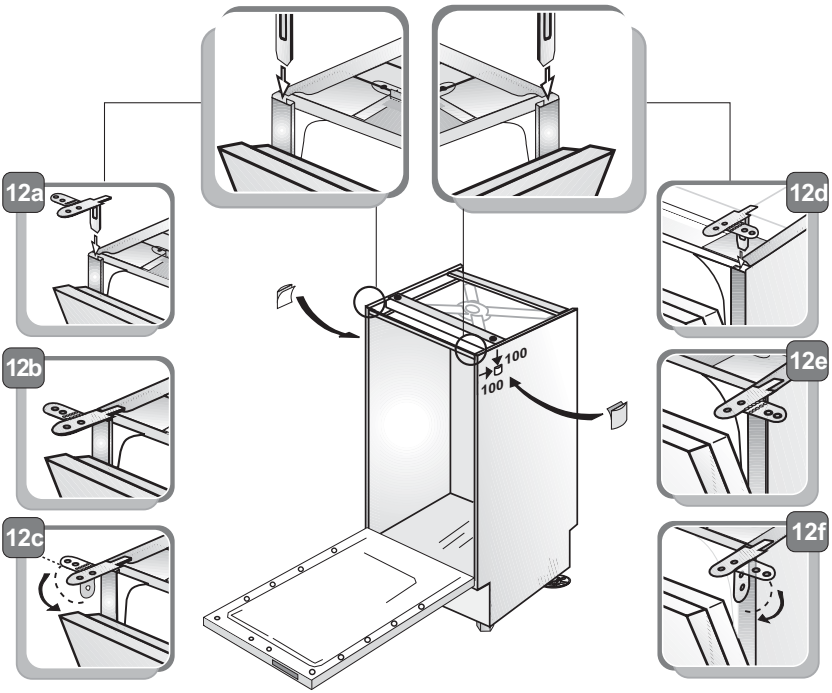

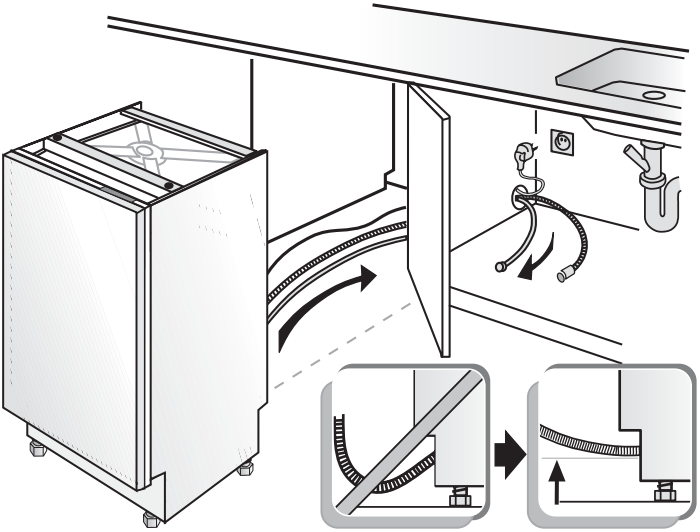

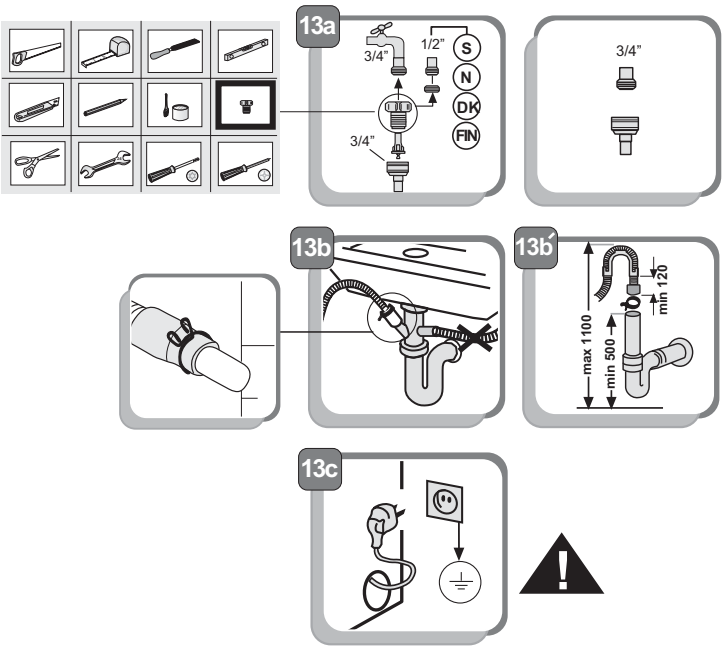
13a
3/4"
1/2"
S
N
DK
FIN
3/4"
3/4"
13b
13b
max 1100
min 500
min 120
13c

## 14

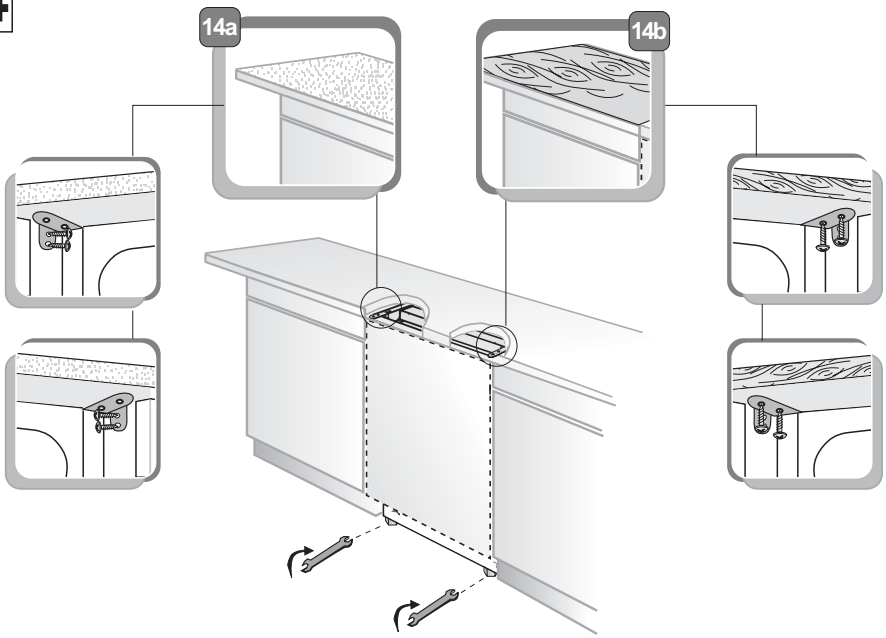

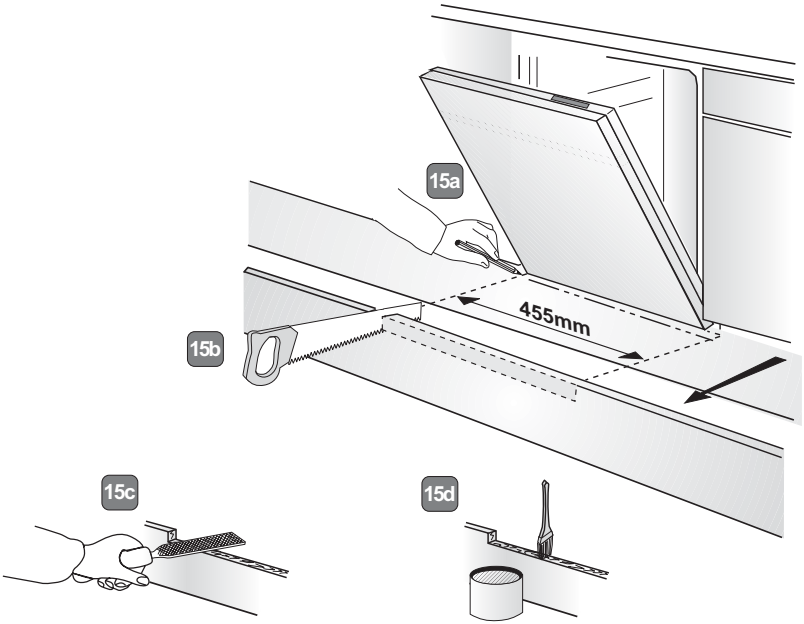
## 15